RESEARCH LETTER

Two Faces of the Same Coin: Benign Familial Infantile Seizures and Paroxysmal Kinesigenic Dyskinesia Caused by *PRRT2* Mutations

Shuzo Kure, the first to describe paroxysmal kinesigenic dyskinesia (PKD) in a Japanese journal in 1892,[1] would have been pleased to learn that the gene for this condition has now been identified.[2,3] Paroxysmal kinesigenic dyskinesia is the most common paroxysmal movement disorder, presenting with brief episodes of dystonic, choreatic, or ballistic, and sometimes bizarre, involuntary movements triggered by sudden movement with onset in childhood or adolescence.[4] Owing to its unusual semiology, PKD is often misdiagnosed as a psychogenic disorder. However, it is easily treatable with low doses of anticonvulsants.[4] Notably, PKD has been clinically and genetically linked to a variety of heterogeneous and, at first sight, unrelated conditions. This includes benign familial infantile seizures (BFIS); the syndrome of rolandic epilepsy, paroxysmal exercise–induced dyskinesia, and writer's cramp; and even the trait of wet ear wax (cerumen).[1,4] Indeed, the co-occurrence of BFIS and PKD in families has resulted in the identification of another illness, infantile convulsions and paroxysmal choreo-athetosis (ICPC).[1,4]

Benign familial infantile seizures may be one of the most common forms of epilepsy that develop in the first 2 years of life and is characterized by nonfebrile convulsions with onset at between 3 and 12 months of age.[5] Seizures are focal, with or without secondary generalization, occurring in clusters and often resulting in cyanosis. The disorder leads to considerable anxiety among parents and doctors who are unfamiliar with it, but it also responds reliably to carbamazepine and has a benign prognosis.[5]

Mutations in the proline-rich transmembrane protein 2 (*PRRT2*) gene, which is located within the previously linked region on chromosome 16, have been identified as the cause of PKD and ICPC.[2,3,6]

We screened the entire *PRRT2* gene for mutations in 3 families with ICPC and 1 family with PKD—3 of German and 1 of Turkish-Russian descent. Neuropediatricians reviewed the patients, and the diagnoses of PKD and BFIS were based on established criteria.[4,5] All affected members had typical features of PKD and/or BFIS and were identified with the previously reported heterozygous truncating c.649dupC (p.R217PX8) mutation.[2,3,6] Notably, this mutation was found in 3 individuals with isolated BFIS, 6 patients with pure PKD, 3 with both BFIS and PKD, and 1 nonmanifesting carrier (**Figure**). Genotyping of these pedigrees showed 4 independent haplotypes, suggesting that this mutation arose from recurrent mutational events.

These results confirm that *PRRT2* mutations cause PKD and ICPC in multi-ethnic populations including German, Turkish, and Russian. Most importantly, they provide further evidence that the 2 apparently clinically distinct syndromes of BFIS and PKD can be allelic conditions, and they can both be caused by the same mutation in *PRRT2*.

There has been debate about whether paroxysmal dyskinesias have an epileptic origin.[1,4] It is notable that in PKD, ictal and interictal changes are typically absent on electroencephalogram.[1,4] However, the confirmation that PKD and BFIS can have a shared genetic cause lends support to the concept that the pathophysiological mechanism underlying PKD may be subcortical epileptogenic discharges, possibly originating from the basal ganglia. The molecular pathway may involve synaptic regulation via interactions with the SNAP25 protein, ultimately leading to neuronal hyperexcitability.[6]

These findings are of interest to a broad range of clinicians who may encounter patients presenting with infantile convulsions or PKD. Paroxysmal kinesigenic dyskinesia should be suspected in families with a child with BFIS and vice versa. There is now evidence to suggest that a simple genetic test (sequencing of the small *PRRT2* gene) may replace laborious and expensive diagnostic investigations in these patients. The finding of *PRRT2* mutations in families with isolated BFIS without co-occurring PKD has been a recent development, further expanding the phenotypic spectrum.[7]

Alexander Schmidt, MD
Kishore R. Kumar, MBBS, FRACP
Katharina Redyk, MD
Anne Grünewald, PhD
Matthias Leben, MD
Alexander Münchau, MD
Carolyn M. Sue, MBBS, FRACP, PhD
Johann Hagenah, MD
Hans Hartmann, MD
Katja Lohmann, PhD
Hans-Jürgen Christen, MD
Christine Klein, MD

Accepted for Publication: February 1, 2012.
Author Affiliations: Section of Clinical and Molecular Neurogenetics, Department of Neurology, University of Lübeck, Lübeck, (Drs Schmidt, Kumar, Redyk, Grünewald, Hagenah, Lohmann, and Klein), Children's

©2012 American Medical Association. All rights reserved.
Downloaded From: http://jamanetwork.com/ on 05/22/2013

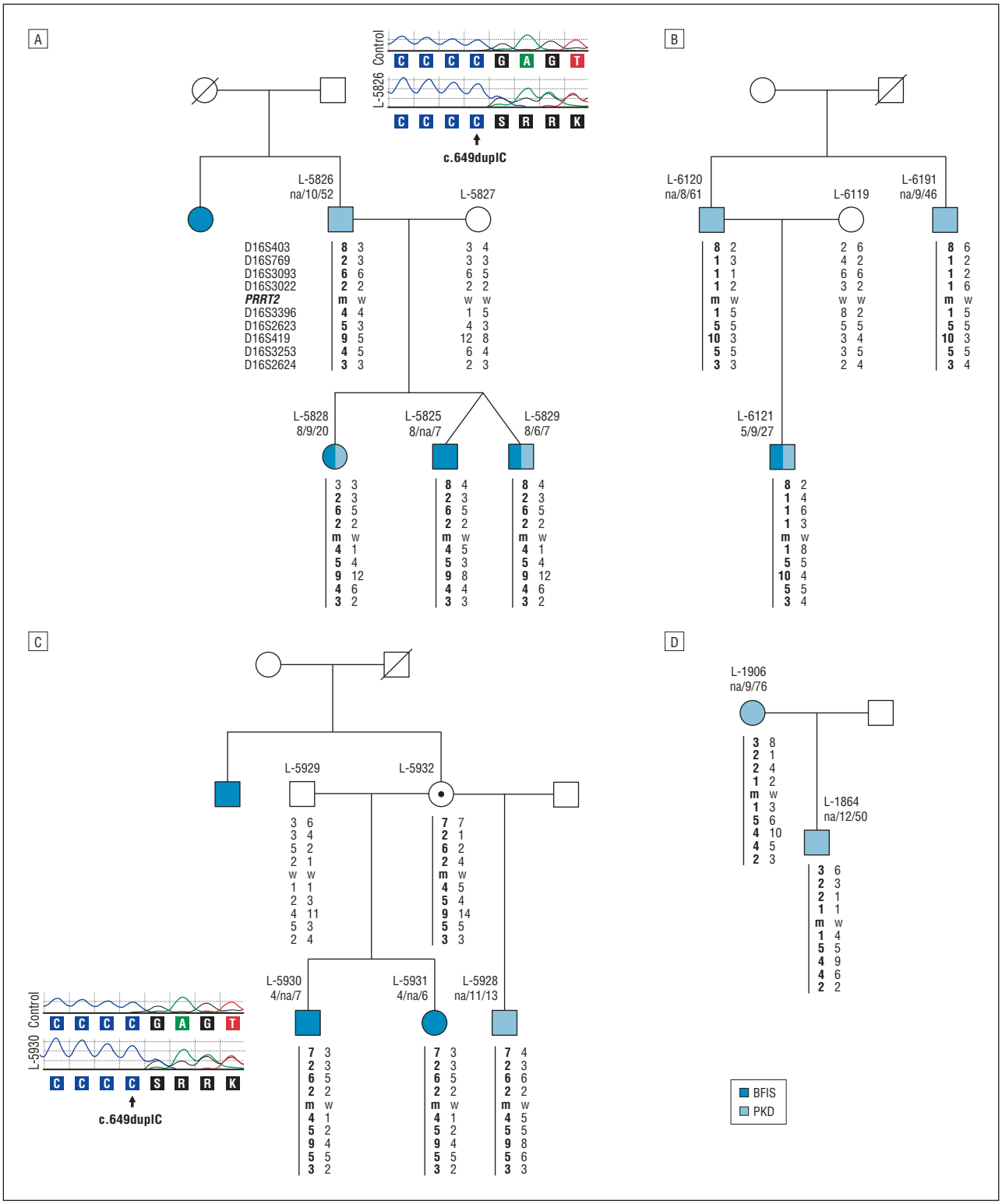

Figure. Pedigrees of families with benign familial infantile seizures (BFIS) and paroxysmal kinesigenic dyskinesia (PKD) in families of German origin (A, B, and D) and Turkish-Russian descent (C). Examples of electropherograms illustrating the heterozygous c.649dupIC mutation (m) in 1 patient with isolated BFIS and 1 with PKD are given in the inserts. As comparison, a wild-type sequence (w) of a control individual is shown. Circles indicate females; squares, males; and dot mark, an unaffected carrier. The mutant allele is indicated by a line adjacent to the haplotype. Patients with an L-code have been genetically tested and neurologically examined. In patients with an L-code, diagnosis was based on history by family members. The following items are listed directly beneath each L-code: age at onset for BFIS (months)/age at onset for PKD (years)/current age (years).

Hospital, Salzgitter (Drs Redyk and Leben), Department of Neurology, University Medical Center Hamburg-Eppendorf, Hamburg (Dr Münchau); Clinic for Pediatric Kidney, Liver, and Metabolic Diseases, Hanover Medical School, (Dr Hartmann) and Children's Hospital Auf der Bult, Hanover (Dr Christen), Germany; and

©2012 American Medical Association. All rights reserved.
Downloaded From: http://jamanetwork.com/ on 05/22/2013

Department of Neurogenetics, Kolling Institute of Medical Research, Royal North Shore Hospital and University of Sydney, Sydney, Australia (Drs Kumar and Sue).
Correspondence: Dr Klein, Department of Neurology, University of Lübeck, Ratzeburger Allee 160, Lübeck, 23538, Germany (christine.klein@neuro.uni-luebeck.de).
Author Contributions: *Study concept and design:* Schmidt, Lohmann, Christen, and Klein. *Acquisition of data:* Schmidt, Kumar, Redyk, Leben, Münchau, Hagenah, Lohmann, Christen, and Klein. *Analysis and interpretation of data:* Schmidt, Kumar, Grünewald, Leben, Münchau, Sue, Hans, Lohmann, Christen, and Klein. *Drafting of the manuscript:* Schmidt, Kumar, Grünewald, and Sue. *Critical revision of the manuscript for important intellectual content:* Schmidt, Kumar, Redyk, Grünewald, Leben, Münchau, Sue, Hagenah, Hans, Lohmann, Christen, and Klein. *Obtained funding:* Klein. *Administrative, technical, and material support:* Münchau, Sue, Hans, and Klein. *Study supervision:* Schmidt, Grünewald, Lohmann, and Klein.
Financial Disclosure: Dr Schmidt receives research support from the medical faculty of the University of Lübeck. Dr Kumar's work is supported by a National Health and Medical Research Council postgraduate scholarship. Dr Grünewald has received research support from the medical faculty of the University of Lübeck, the Deutsche Forschungsgemeinschaft, and the Dystonia Medical Research Foundation. She was also awarded travel grants from the GlaxoSmithKline Foundation, the Boehringer Ingelheim Foundation, and the German Academic Exchange Service. Dr Münchau has received commercial research support by Allergan, Ipsen, and Merz Pharmaceuticals, as well as honoraria for lectures from Allergan. He has also received research support from the Dystonia Medical Research Foundation (USA), the Tourette Society (Germany), and the Deutsche Forschungsgemeinschaft (MU1692/2-2). Dr Sue has received research support from the Australian Brain Foundation. Dr Hagenah receives research support from the Bachmann-Strauss Dystonia and Parkinson Disease Foundation and has received honoraria as an invited speaker from GlaxoSmithKline. Dr Lohmann receives research support from the German Research Foundation and the Bachmann-Strauss Dystonia and Parkinson's Disease Foundation. Dr Klein is a member of the editorial board of *Neurology* and has served as faculty at the Annual Meetings of the American Academy of Neurology since 2004. She has received consulting fees from Boehringer Ingelheim and Centogene as well as honoraria for speaking engagements from Boehringer Ingelheim and Merz Pharma. Dr Klein is also the recipient of a career development award from the Hermann and Lilly Schilling Foundation. Her work is funded by the Deutsche Forschungsgemeinschaft, the Possehl Foundation, and the Bachmann-Strauss Dystonia and Parkinson's Disease Foundation, and she has received institutional support from the University of Lübeck for genetics research.
Conflicts of Interest: The authors report no conflicts of interest related to the research in this article.
Additional Contributions: We thank the patients and family members for their participation in the study.

1. Kato N, Sadamatsu M, Kikuchi T, Niikawa N, Fukuyama Y. Paroxysmal kinesigenic choreoathetosis: from first discovery in 1892 to genetic linkage with benign familial infantile convulsions. *Epilepsy Res*. 2006;70(suppl 1):S174-S184.
2. Wang JL, Cao L, Li XH, et al. Identification of PRRT2 as the causative gene of paroxysmal kinesigenic dyskinesias. *Brain*. 2011;134(pt 12):3493-3501.
3. Chen WJ, Lin Y, Xiong ZQ, et al. Exome sequencing identifies truncating mutations in PRRT2 that cause paroxysmal kinesigenic dyskinesia. *Nat Genet*. 2011;43(12):1252-1255.
4. Bhatia KP. Paroxysmal dyskinesias. *Mov Disord*. 2011;26(6):1157-1165.
5. Caraballo R, Pavek S, Lemainque A, et al. Linkage of benign familial infantile convulsions to chromosome 16p12-q12 suggests allelism to the infantile convulsions and choreoathetosis syndrome. *Am J Hum Genet*. 2001;68(3):788-794.
6. Lee H-Y, Huang Y, Bruneau N, et al. Mutations in the gene PRRT2 cause paroxysmal kinesigenic dyskinesia with infantile convulsions. *Cell*. 2012;1(1):2. doi:10.1016/j.celrep.2011.1011.1001.
7. Heron SE, Grinton BE, Kivity S, et al. PRRT2 mutations cause benign familial infantile epilepsy and infantile convulsions with choreoathetosis syndrome. *Am J Hum Genet*. 2012;90(1):152-160.

COMMENTS AND OPINIONS

Insulin and Alzheimer Disease

The article by Craft et al[1] demonstrating that intranasal insulin improves cognitive function and fludeoxyglucose F 18 uptake in specific regions of the brain in patients with mild cognitive impairment and Alzheimer disease (AD) is a landmark study. For the first time, the previous data that AD is both a reflection of a combination of diminished insulin bio-availability and insulin action has been borne out. In addition, the data are consistent with the fact that AD is a chronic inflammatory disease and that insulin exerts a potent anti-inflammatory effect.[2]

More recently, it has also been shown that insulin suppresses the expression of genes related to AD: amyloid precursor protein, presenilins 1 and 2, and glycogen synthase kinase-3β in peripheral blood mononuclear cells.[3] These actions could potentially limit the formation of β-amyloid and the intracellular neurofibrillary tangles. While these observations were not made in neurons, they were obtained in humans in vivo with doses and concentrations of insulin that are therapeutically relevant. It is possible that intranasally administered insulin achieves sufficiently high intracerebral concentrations of insulin to suppress the expression of the genes just mentioned.

In this context, it is also relevant that the amyloid precursor protein has recently been shown to be expressed in vascular tissue where it may, along with β-amyloid, exert pro-inflammatory and potential pro-atherogenic effects. Thus, the effects of insulin are relevant both at the cerebral and vascular levels.

Clearly, larger long-term studies are required to establish the use of intranasal insulin in the treatment of AD. Additionally, specific biomarkers are readily obtainable samples and easy to measure, and those that are highly responsive to therapy are clearly needed. However, it is clear that a door has been opened for the rational treatment of this hitherto almost untreatable disease with a drug that has practically no adverse effects other than hypoglycemia. This effect can be avoided by its intranasal

©2012 American Medical Association. All rights reserved.
Downloaded From: http://jamanetwork.com/ on 05/22/2013