STUDY

Geometric Staged Excision for the Treatment of Lentigo Maligna and Lentigo Maligna Melanoma

A Long-term Experience With Literature Review

Mark Abdelmalek, MD; Michael P. Loosemore, MD; Mark A. Hurt, MD; George Hruza, MD

Objective: To ascertain and clarify the effectiveness and advantages of the geometric staged excision technique for the removal of lentigo maligna (LM) and lentigo maligna melanoma (LMM).

Design: This was a retrospective review of a patient database composed of 293 cases of LM and LMM.

Setting: The Laser and Dermatologic Surgery Center in St Louis, Missouri, an academic-affiliated, private dermatologic surgery center.

Patients: All patients with a diagnosis of LM and LMM treated by staged excision from 1999 to 2007.

Main Outcome Measures: The overall rate of recrudescence, margins required for clearance, stages required for clearance, and lesional characteristics were examined.

Results: The rate of recrudescence after geometric staged excision was 1.7% (4/239), with a mean of 32.3 months of follow-up. The mean margin to clearance after excision was 6.6 mm for LM and 8.2 mm for LMM. A total of 11.7% of LMM was initially diagnosed as LM on biopsy, with the invasive component discovered during the excision.

Conclusions: Geometric staged excision is an optimal method of removal of LM and LMM given its low rate of recrudescence and ability for complete examination of the peripheral and deep margins of the specimens.

Arch Dermatol. 2012;148(5):599-604

Author Affiliations: Department of Dermatology, Drexel University College of Medicine, Philadelphia, Pennsylvania (Dr Abdelmalek); Dermatologic Surgery, The Methodist Hospital, Houston, Texas (Dr Loosemore); Departments of Dermatology (Drs Hurt and Hruza) and Otolaryngology–Head and Neck Surgery (Dr Hruza), St Louis University School of Medicine, and Division of Dermatology, Washington University School of Medicine (Dr Hurt), St Louis, Missouri.

Lentigo maligna (LM) is a form of melanoma in situ (MIS) that occurs on sun-damaged skin. As with any pattern of MIS, LM may eventually involve the dermis, at which point it is a lentigo maligna melanoma (LMM) and confers the same prognosis of other patterns of melanoma for any given depth of dermal infiltration.[1-5] Lentigo maligna is particularly important to the dermatologic surgeon because it is identified most commonly on areas where tissue-sparing excisions are desired for optimal cosmetic outcomes.[6] Complete excision with negative histologic margins is the standard of care in the treatment of these lesions because of the risk of dermal infiltration and persistence (true local recurrence).[7-13]

CME available online at www.jamaarchivescme.com

Since the National Institutes of Health consensus statements for diagnosis and treatment of "early" melanoma in 1992, 5-mm margins have been the "standard" in the excision of MIS (including LM). Multiple studies[8,10,13-16] have demonstrated that this margin may not be adequate for complete removal, with persistence and regrowth rates of LM and LMM reported as high as 9% to 20% with local excision. In addition, standard surgical excision of LM with 5-mm margins assumes that lesions diagnosed initially by biopsy as MIS are indeed *only* in situ, which is often not the case. In a comprehensive review, Dawn et al[17] found that nearly 25% of lesions diagnosed initially as MIS had a dermal melanoma component discovered at reexcision.

Given the aforementioned rates of persistence, alternative surgical techniques to simple excision are used often in the treatment of these lesions. Conventional Mohs surgery, with its associated tissue sparing and margin evaluation, is one such treatment. This practice is, however, not without controversy because frozen-section processing often alters the morphologic characteristics of keratinocytes, producing halos that mimic melanocytes, and makes the discrimination of either cell somewhat difficult. Even with the use of rapid immunostaining, these artifacts of freezing may possibly lead to the obscuring of the true margins of the lesion.[2] Published rates of recrudescence with Mohs

©2012 American Medical Association. All rights reserved.
Downloaded From: http://jamanetwork.com/ on 05/21/2013

Figure 1. Preoperative clinical appearance of lentigo maligna.

Figure 2. Preoperative lentigo maligna lesional outline after using a Wood lamp.

micrographic surgery for LM and LMM range from 0% to 4% in studies involving only Mohs surgery to 33% in a relatively small study that compared Mohs surgery with staged excision.[18-21]

Staged excision of melanoma is another alternative excision method that promises not only to retain tissue sparing but also to allow for paraffin-embedded tissue processing, thus avoiding any keratinocyte freeze artifact.[22-28] In addition, marginal evaluation is performed by a trained dermatopathologist, something that we consider to be extremely important for delineating lesional margins because melanocytic hyperplasia may be difficult to differentiate from melanocytic neoplasia (ie, MIS) even for a trained, experienced dermatologist. Staged excision, to date, has demonstrated low rates of persistence of 0% to 7% among

Figure 3. Preoperative geometric-shaped excisional outline.

all published data.[21,24-36] These rates are at least comparable, if not superior, to rates of persistence with Mohs surgery. A recent, albeit small, study[21] found staged excision (7% persistence) to be superior to Mohs surgery (33% persistence) when the 2 methods were compared directly.

METHODS

A database was compiled from a retrospective medical record review of all patients with a diagnosis of LM and LMM treated by staged excision from January 1, 1999, through December 31, 2007, at the Laser and Dermatologic Surgery Center in St Louis, Missouri. There were 293 cases that met these criteria and from which the following data points were obtained: age at diagnosis, sex, tumor location, tumor size preoperatively and postoperatively, tumor depth, ulceration, excision margin(s), number of stages, workup, and long-term follow-up information. Follow-up was obtained by record review of both patient office visits and telephone calls, with the reported length of follow-up consisting of the time from initial excision to the last recorded office visit or telephone call if the patient had moved to a different location or sought treatment from a different health care professional. Recrudescence was determined by clinical examination. Institutional review board–approval for these data and the review were submitted and granted from the Drexel University College of Medicine (protocol 19448). All data obtained and analyzed were in accordance with the ethical standards of the responsible committee on human experimentation and with the Helsinki Declaration of 1975, as revised in 1983.

All melanomas were identified initially by shave, punch, or incisional biopsy with subsequent histologic analysis. On presentation to the surgery center (**Figure 1**), a Wood lamp was used to demarcate the clinically apparent margins of the lesions (**Figure 2**), and a geometric shape with at least 3 sides and encompassing a 3- to 5-mm (5-mm where possible) margin was then drawn around the lesion (**Figure 3**). The exact margin used was measured and recorded in the record. The area was anesthetized under local anesthesia, and the site was prepared and draped. Vertical incisions at 90° to these margins were created to the level of the middle to deep subcutaneous fat layers (**Figure 4**). The shape was then excised at this level. The

©2012 American Medical Association. All rights reserved.
Downloaded From: http://jamanetwork.com/ on 05/21/2013

Figure 4. Postexcisional geometric defect.

Figure 5. Excisional specimen sectioning before permanent fixation.

central portion (debulk specimen) and the margin specimens were oriented and inked on site in the laboratory (**Figure 5**). A map of the lesion was added to the medical record. The specimen was submitted for rush permanent section processing within 24 to 48 hours. After hemostasis was obtained with cautery, a dressing consisting of antibiotic ointment and nonstick gauze was applied to the open wound. The patient was then sent home until the specimen had been examined by a dermatopathologist, after which the patient returned to the office for additional excised stages with 3- to 5-mm margins if residual melanoma was present or for defect repair if the margins were clear. Repairs were done either in house or by oculoplastic surgeons or plastic surgeons if necessary.

A dermatopathologist inspected the specimen on its arrival in the laboratory and compared the surgeon's diagram to the specimens received. The surgeon already applied ink to the specimens so that they corresponded to the drawing received. In most cases, there were 4 specimens, which comprised the periphery, but the range was 3 to 6 specimens for the periphery depending on the size of the excision. The center field (debulk specimen) was also examined using an "on edge" technique to determine the depth of a dermal component of melanoma, if any.

Each of the separate specimens that constituted the peripheral margins was examined and measured, and a small application of ink was applied to the epidermis at the most clockwise tip. For example, if all the specimens were laid out as per the diagram, the clockwise tip of each specimen always leads so that the epidermal surface of a 12- to 3-o'clock specimen was inked at 3 o'clock, the 3- to 6-o'clock specimen was inked at 6 o'clock, and so on for each separate peripheral margin specimen (**Figure 6**). Each of these specimens was then placed in a separately labeled cassette for paraffin processing. The center section was inked in the deeper aspect and divided as was practical for evaluation in the vertical (ie, on edge) traditional manner to evaluate and measure a dermal component of the melanoma if one was identified. These specimens were placed into cassettes for processing to paraffin.

The following day, the specimens, now fully paraffinized, were reexamined by the dermatopathologist. The specimens were oriented so that the true margin was en face, and the inked epidermis was scored with a sharp blade superficially at the point on the epidermis where epidermal ink was applied so that the

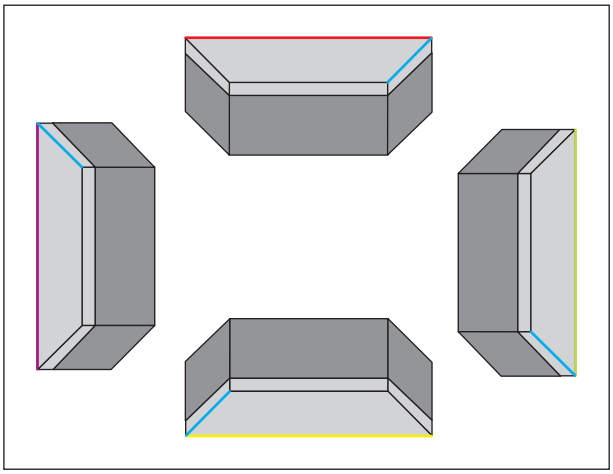

Figure 6. Diagram of orientation of specimens by the dermatopathologist. The peripheral margin of each specimen was already inked with a unique color at the epidermal edge (red, green, yellow, and purple) by the surgeon at the time of excision. The most clockwise margin of each specimen was then inked with the same unique color at the epidermal edge (blue) by the dermatopathologist at the time of tissue processing and embedding.

score mark could be identified under the microscope. These specimens were then embedded en face in the paraffin boat so that the entire true margin could be sectioned by the histotechnologist. The center sections were embedded on edge so that any residual melanoma could be measured. If indicated, immunostaining with Melan-A (clone A103) was performed, a practice that evolved into staining every case, as determined by the dermatopathologist, due to its utility in differentiating subtleties in melanocyte density at the specimen margins. If histopathologic features of MIS extended to an inked margin, the margin was reported as involved.

RESULTS

A total of 293 lesions (225 LM lesions and 68 LMM lesions) were treated by staged excision between 1999 and

©2012 American Medical Association. All rights reserved.
Downloaded From: http://jamanetwork.com/ on 05/21/2013

Table 1. Characteristics of the 293 Study Participants

Characteristic	Value
Men, No.	180
Women, No.	113
LMs, No.	225
LMMs, No.	68
Total LM margin, mean (range), cm	0.66 (0.3-3.5)
Total LMM margin, mean (range), cm	0.82 (0.3-2.0)
LM stages, mean (range), No.	1.4 (1-7)
LMM stages, mean (range), No.	1.4 (1-4)
LMM depth, mean (range), mm	0.41 (0.12-1.35)
Primary lesions, No.	284
Previously excised lesions, No.	9
True local recrudescence, No. (%)	4/239 (1.7)
Mean follow-up, mo	32.3 (2-96)

Abbreviations: LM, lentigo maligna; LMM, lentigo maligna melanoma.

Table 2. Comparison of Stages Required for Marginal Clearance

	No. of Stages	
Stage	LM	LMM
1	164	48
2	48	17
3	9	2
4	1	1
5	2	0
6	0	0
7	1	0

Abbreviations: LM, lentigo maligna; LMM, lentigo maligna melanoma.

2007. The mean age at diagnosis was 67 years, with a male to female predominance of 1.6:1. The face was the most common presenting location, with 198 lesions (67.6%) occurring there. Within this general location, the cheek accounted for most facial lesions (27.9% of all lesions), followed by the forehead and temple at 10.9% of all lesions each. The upper extremity was the second most common general location of neoplasms at 11.9% of lesions.

Histopathologically, LM represented 76.8% of all lesions, with melanoma also involving the dermis (LMM) found in the remaining 23.2%. More important, 11.7% of lesions found to have a dermal component of melanoma in the definitive staged excision were initially interpreted as LM on biopsy, and thus these lesions were upgraded to LMM.

The mean margin to clearance after excisions was 6.6 mm for LM and 8.2 mm for LMM (**Table 1**). For lesions of LM, 26 (11.6%) required less than 5-mm margins for clearance, 140 (62.2%) required 5-mm margins, and 59 (26.2%) required greater than 5-mm margins for clearance. Lesions of LMM required less than 10-mm margins for clearance in 34 cases (50.0%), 10-mm margins in 29 cases (42.6%), and greater than 10-mm margins in 5 cases (7.4%). Most lesions for both LM and LMM were cleared by 1 stage (72.9% of LM and 70.6% of LMM). Less than 1.7% of lesions of either LM or LMM required greater than 3 stages, with 7 being the most stages any lesion required (**Table 2**).

Table 3. Characteristics of Patients With Recrudescence

Sex	Location	Depth	Stage	Previously Excised	Time to Recrudescence, mo
Male	Cheek	MIS	1	No	7
Male	Cheek	MIS	2	No	5
Female	Cheek	MIS	4	Yes	27
Female	Cheek	MIS	2	No	22

Abbreviation: MIS, melanoma in situ.

Of the 293 staged excisions, follow-up was performed for 239 (81.6%). Sixty patients were lost to follow-up, including 15 who died from unrelated causes. The total follow-up ranged from 2 to 96 months, with a mean of 32.3 months and a median of 30 months. Of the 239 patients with follow-up data, 235 (98.3%) had no clinical recrudescence. Four patients (1.7%) had recrudescence, all of which arose from LM on the cheek (**Table 3**). The mean time to recrudescence was 15 months (range, 5-27 months), with 3 of the 4 treated with reexcision and 1 with parotidectomy, radiation therapy, and neck dissection. There were no recrudescence-associated deaths.

For comparison, a literature review using the PubMed and Ovid databases and the keywords *staged excision* with *lentigo maligna* and *melanoma in situ* revealed 14 studies of staged excision of LM with 984 tumors treated. To date, to our knowledge, this is the largest single reported case series of staged excision of LM and LMM (**Table 4**).

COMMENT

As in other retrospective studies of staged excision of MIS, this large study, with 293 lesions and a mean of 32.3 months of follow-up, reaffirms the often-cited inadequacy of the "standard" 5-mm margins for MIS. In this series of cases, a mean margin of 6.6 mm was required to achieve complete clearance of lesions of LM. Most strikingly, the data highlight a significant number of neoplasms that would have already extended beyond the planned margins if treated with traditional 5-mm margins (26.2%). This fact alone underscores the importance of integrating complete marginal evaluation in the treatment of these lesions. Geometric staged excision is designed for and allows for exactly that.

An additional strength of geometric staged excision lies in the ability to also evaluate the deep margin of a lesion before final closure. As reported in both this and prior studies, a significant percentage of lesions require upgrading from initial biopsy results on final histologic evaluation after excision. In this study, 11.7% of lesions found to involve the dermis on final histologic evaluation were initially interpreted as MIS.

Interestingly, the mean margin to complete clearance of lesions of LMM was 82.4 mm, which is *less* than the "standard" of 10-mm margins for such neoplasms. This lends credence to the practice of tissue-sparing surgery on cosmetically sensitive areas (areas that may not easily allow a 10-mm margin). In taking lesser margins, however, it is the opinion of the authors that 100% of the excised margin should be evaluated. Although oth-

©2012 American Medical Association. All rights reserved.
Downloaded From: http://jamanetwork.com/ on 05/21/2013

Table 4. Clearance Rates of Previously Published Studies of Staged Excision of LM and LMM

Source	No. of Lesions	Follow-up, mo	Disease Free, %
Present study	293	32.3	98.4
Gaudy-Marqueste et al,[36] 2011	21	25.3	95.2
Bosbous et al,[35] 2009	59	27	98.3
Moller et al,[34] 2009	61	14	100
Jejurikar et al,[25] 2007	51	32	100
Walling et al,[21] 2007	41	95	93
Hazan et al,[32] 2008	117	NR	NR
Mahoney et al,[26] 2005	11	4.7	100
Bub et al,[27] 2004	59	57	95
Huilgol et al,[28] 2004	161	38	98
Malhotra et al,[31] 2003	141	32	97
Agarwal-Antal et al,[29] 2002	92	48	100
Anderson et al,[33] 2001	~150	<60	99
Hill and Gramp,[30] 1999	66	25	98
Johnson et al,[24] 1997 and 2002	35	70	100 and 99
Dhawan et al,[22] 1990	1	12	100

Abbreviations: LM, lentigo maligna; LMM, lentigo maligna melanoma; NR, not recorded.

ers have reported excellent results with the use of radial sectioning, this technique does not evaluate the entire peripheral margin and thus leaves open a potential for undetected positive margins.[27] The authors prefer en face sectioning, with its ability to examine 100% of the peripheral margin. Although the mean margin to clearance was less than 10 mm in this study, with many lesions requiring less than 10-mm margins for clearance (42.6%), there were still 7.4% of LM lesions that required *greater than* 10-mm margins for clearance. Thus, a technique that combines tissue sparing with complete marginal evaluation is optimal for the excision of these lesions.

As the use of staged excision in the treatment of these melanocytic lesions has become increasingly accepted, if not championed by some, there is still considerable variation regarding the actual technique used in these staged excisions. We advocate geometric staged excision because, in our opinion, it holds some advantages over other methods. The staged aspect of the procedure allows for tissue sparing, and the nature of the geometric design allows for accurate orientation and mapping of the specimen, as well as even sectioning of the tissue after excision. The paraffin-embedded vertical sectioning and processing involved in this technique, as previously stated, lead to evaluation of the entire peripheral margin, examination of the deep margin for depth invasion, and more accurate identification of melanocytes than frozen processing. The excisional technique in this study involves the removal of the entire specimen at once without closure of the open, albeit bandaged, wound until marginal evaluation is complete. We prefer this technique over other techniques that allow for a temporary closure of the wound because these lesions often require more than one stage for clearance, as was demonstrated in this study. Multiple temporary closures may prolong the time both the patient and the surgeon must spend in the operating room.

Last, this study has strived to include the longest follow-up of patients possible, with a mean follow-up of 32 months and a maximum of 96 months. This is important because clinical recrudescence most often occurs 3 to 5 years after excision, a period that is approached by the mean and median follow-up and met or exceeded by a full 37% of follow-up cases. The recrudescent cases appeared during a much shorter timeframe (5-27 months), but because there were only 4 total cases of recrudescence, no meaningful conclusions can be drawn from this.

We cannot overstress the importance of complete margin control with excision of these lesions. We believe that geometric staged excision affords optimum margin control with the ability to examine a full 100% of all excised peripheral margins and provides for extremely low recrudescence rates. As identified in this and other similar studies, the ability to examine the debulk areas vertically is also paramount to treatment because a significant percentage of lesions thought to be in situ on initial biopsy were found to be, and treated as, melanoma involving the dermis on examination of excised specimens. In addition, the permanent fixation method of this technique provides for more optimal dermatopathologic evaluation of lesional spread and differentiation of melanocytes from keratinocytes over the frozen fixation possible with Mohs surgery. Given that geometric staged excision confers all these advantages, we believe it is an optimal excisional method for LM and LMM.

Accepted for Publication: October 3, 2011.
Correspondence: Michael P. Loosemore, MD, DermSurgery Associates, 7515 S Main, Ste 240, Houston, TX 77030 (mploosemore@tmhs.org).
Author Contributions: All authors had full access to all the data in the study and take responsibility for the integrity of the data and the accuracy of the data analysis. *Study concept and design:* Abdelmalek, Loosemore, Hurt, and Hruza. *Acquisition of data:* Abdelmalek, Hurt, and Hruza. *Analysis and interpretation of data:* Loosemore and Abdelmalek. *Drafting of the manuscript:* Loosemore and Abdelmalek. *Critical revision of the manuscript for important intellectual content:* Loosemore, Abdelmalek, Hruza, and Hurt. *Administrative, technical, or material support:* Loosemore, Abdelmalek, Hurt, and Hruza. *Study supervision:* Loosemore, Abdelmalek, Hurt, and Hruza.
Financial Disclosure: None reported.
Additional Contributions: We are indebted to Scott Radle, Liana Abramova, and the staff at the Laser & Dermatology Surgery Center in St Louis, Missouri.
Additional Information: Drs Abdelmalek and Loosemore contributed equally to this work and share first authorship.

REFERENCES

1. Hutchinson J. On tissue dotage. *Arch Surg (London).* 1892;3:315-332.
2. Cohen LM. Lentigo maligna and lentigo maligna melanoma. *J Am Acad Dermatol.* 1995;33(6):923-940.
3. Clark WH Jr, Elder DE, Van Horn M. The biologic forms of malignant melanoma. *Hum Pathol.* 1986;17(5):443-450.
4. Cohen LM. Lentigo maligna and lentigo maligna melanoma. *J Am Acad Dermatol.* 1997;36(6 pt 1):913.
5. Weinstock MA, Sober AJ. The risk of progression of lentigo maligna to lentigo maligna melanoma. *Br J Dermatol.* 1987;116(3):303-310.

©2012 American Medical Association. All rights reserved.
Downloaded From: http://jamanetwork.com/ on 05/21/2013

6. McKenna JK, Florell SR, Goldman GD, Bowen GM. Lentigo maligna/lentigo maligna melanoma: current state of diagnosis and treatment. *Dermatol Surg*. 2006; 32(4):493-504.
7. Collins P, Rogers S, Goggin M, Manning W. Cryotherapy for lentigo maligna. *Clin Exp Dermatol*. 1991;16(6):433-435.
8. Coleman WP III, Davis RS, Reed RJ, Krementz ET. Treatment of lentigo maligna and lentigo maligna melanoma. *J Dermatol Surg Oncol*. 1980;6(6):476-479.
9. Zacarian SA. Cryosurgical treatment of lentigo maligna. *Arch Dermatol*. 1982;118 (2):89-92.
10. Pitman GH, Kopf AW, Bart RS, Casson PR. Treatment of lentigo maligna and lentigo maligna melanoma. *J Dermatol Surg Oncol*. 1979;5(9):727-737.
11. Lee PK, Rosenberg CN, Tsao H, Sober AJ. Failure of Q-switched ruby laser to eradicate atypical-appearing solar lentigo: report of two cases. *J Am Acad Dermatol*. 1998;38(2 pt 2):314-317.
12. Farshad A, Burg G, Panizzon R, Dummer R. A retrospective study of 150 patients with lentigo maligna and lentigo maligna melanoma and the efficacy of radiotherapy using Grenz or soft X-rays. *Br J Dermatol*. 2002;146(6):1042-1046.
13. Osborne JE, Hutchinson PE. A follow-up study to investigate the efficacy of initial treatment of lentigo maligna with surgical excision. *Br J Plast Surg*. 2002; 55(8):611-615.
14. NIH Consensus Conference. Diagnosis and treatment of early melanoma. *JAMA*. 1992;268(10):1314-1319.
15. Balch CM, Urist MM, Karakousis CP, et al. Efficacy of 2-cm surgical margins for intermediate-thickness melanomas (1 to 4 mm): results of a multi-institutional randomized surgical trial. *Ann Surg*. 1993;218(3):262-269.
16. Veronesi U, Cascinelli N. Narrow excision (1-cm margin): a safe procedure for thin cutaneous melanoma. *Arch Surg*. 1991;126(4):438-441.
17. Dawn ME, Dawn AG, Miller SJ. Mohs surgery for the treatment of melanoma in situ: a review. *Dermatol Surg*. 2007;33(4):395-402.
18. Temple CLF, Arlette JP. Mohs micrographic surgery in the treatment of lentigo maligna and melanoma. *J Surg Oncol*. 2006;94(4):287-292.
19. Zitelli JA, Brown C, Hanusa BH. Mohs micrographic surgery for the treatment of primary cutaneous melanoma. *J Am Acad Dermatol*. 1997;37(2 pt 1):236-245.
20. Cohen LM, McCall MW, Zax RH. Mohs micrographic surgery for lentigo maligna and lentigo maligna melanoma: a follow-up study. *Dermatol Surg*. 1998;24 (6):673-677.
21. Walling HW, Scupham RK, Bean AK, Ceilley RI. Staged excision versus Mohs micrographic surgery for lentigo maligna and lentigo maligna melanoma. *J Am Acad Dermatol*. 2007;57(4):659-664.
22. Dhawan SS, Wolf DJ, Rabinovitz HS, Poulos E. Lentigo maligna: the use of rush permanent sections in therapy. *Arch Dermatol*. 1990;126(7):928-930.
23. Abdelmalek M, Abramova L, Hurt M, Hruza G. Effectiveness of staged excisions for treating lentiginous melanoma in situ. *Expert Rev Dermatol*. 2008;3(5): 549-555.
24. Johnson TM, Headington JT, Baker SR, Lowe L. Usefulness of the staged excision for lentigo maligna and lentigo maligna melanoma: the "square" procedure. *J Am Acad Dermatol*. 1997;37(5 pt 1):758-764.
25. Jejurikar SS, Borschel GH, Johnson TM, Lowe L, Brown DL. Immediate, optimal reconstruction of facial lentigo maligna and melanoma following total peripheral margin control. *Plast Reconstr Surg*. 2007;120(5):1249-1255.
26. Mahoney MH, Joseph M, Temple CLF. The perimeter technique for lentigo maligna: an alternative to Mohs micrographic surgery. *J Surg Oncol*. 2005;91 (2):120-125.
27. Bub JL, Berg D, Slee A, Odland PB. Management of lentigo maligna and lentigo maligna melanoma with staged excision: a 5-year follow-up. *Arch Dermatol*. 2004; 140(5):552-558.
28. Huilgol SC, Selva D, Chen C, et al. Surgical margins for lentigo maligna and lentigo maligna melanoma: the technique of mapped serial excision. *Arch Dermatol*. 2004;140(9):1087-1092.
29. Agarwal-Antal N, Bowen GM, Gerwels JW. Histologic evaluation of lentigo maligna with permanent sections: implications regarding current guidelines. *J Am Acad Dermatol*. 2002;47(5):743-748.
30. Hill DC, Gramp AA. Surgical treatment of lentigo maligna and lentigo maligna melanoma. *Australas J Dermatol*. 1999;40(1):25-30.
31. Malhotra R, Chen C, Huilgol SC, Hill DC, Selva D. Mapped serial excision for periocular lentigo maligna and lentigo maligna melanoma. *Ophthalmology*. 2003; 110(10):2011-2018.
32. Hazan C, Dusza SW, Delgado R, Busam KJ, Halpern AC, Nehal KS. Staged excision for lentigo maligna and lentigo maligna melanoma: a retrospective analysis of 117 cases. *J Am Acad Dermatol*. 2008;58(1):142-148.
33. Anderson KW, Baker SR, Lowe L, Su L, Johnson TM. Treatment of head and neck melanoma, lentigo maligna subtype: a practical surgical technique. *Arch Facial Plast Surg*. 2001;3(3):202-206.
34. Möller MG, Pappas-Politis E, Zager JS, et al. Surgical management of melanoma-in-situ using a staged marginal and central excision technique. *Ann Surg Oncol*. 2009;16(6):1526-1536.
35. Bosbous MW, Dzwierzynski WW, Neuburg M. Staged excision of lentigo maligna and lentigo maligna melanoma: a 10-year experience. *Plast Reconstr Surg*. 2009;124(6):1947-1955.
36. Gaudy-Marqueste C, Perchenet AS, Taséi AM, et al. The "spaghetti technique": an alternative to Mohs surgery or staged surgery for problematic lentiginous melanoma (lentigo maligna and acral lentiginous melanoma). *J Am Acad Dermatol*. 2011;64(1):113-118.

Announcement

Dermatologic Photography Tips: Take Great Publishable Images

Tip: Set your camera to 3 megapixels or greater. If you plan to crop extensively, an even higher resolution is desirable. If using .JPG file type, use the highest quality .JPG setting.[1]

Have a great tip? Send it by e-mail to ashish@derm.md.

1. Bhatia AC. The clinical image: archiving clinical processes and an entire specialty. *Arch Dermatol*. 2006;142(1):96-98.

©2012 American Medical Association. All rights reserved.
Downloaded From: http://jamanetwork.com/ on 05/21/2013