ONLINE FIRST

Inclusion Body Myopathy With Paget Disease of Bone and Frontotemporal Dementia Linked to *VCP* p.Arg155Cys in a Korean Family

Eun-Joo Kim, MD; Young-Eun Park, MD; Dae-Seong Kim, MD; Bo-Young Ahn, MD; Hyang-Sook Kim, MS; Young Hee Chang, MD; Seong-Jang Kim, MD; Hak-Jin Kim, MD; Ho-Won Lee, MD; William W. Seeley, MD; SangYun Kim, MD

Background: Missense mutations in the valosin-containing protein (*VCP*) gene on chromosome 9p13.3-p12 cause inclusion body myopathy with Paget disease of bone and frontotemporal dementia (hereafter referred to as IBMPFD; OMIM 167320).

Objective: To describe detailed clinical, electrophysiological, biochemical, and neuroimaging findings in IBMPFD linked to *VCP* p.Arg155Cys in a Korean family.

Design: Case series. Clinical, electrophysiological, biochemical, and neuroimaging findings were obtained by direct evaluation and from previous medical records.

Setting: Tertiary referral hospital.

Participants: Three affected family members in a Korean family.

Results: The clinical features of myopathy, Paget disease of bone, and semantic dementia (a clinical subtype of frontotemporal dementia) in our patients were similar to those of previously reported cases. However, the brain magnetic resonance imaging features in our patients, including asymmetric anterior and lateral temporal and inferior parietal atrophy with ventricular dilatation on the affected side, differed from those of previously published features in patients with IBMPFD and in patients with typical semantic dementia who show anterior temporal and frontal atrophy.

Conclusion: To our knowledge, this report provides the first documented IBMPFD family in Asia and broadens the phenotypic spectrum of *VCP* mutation–associated frontotemporal dementia.

Arch Neurol. 2011;68(6):787-796. Published online February 14, 2011. doi:10.1001/archneurol.2010.376

Author Affiliations are listed at the end of this article.

INCLUSION BODY MYOPATHY WITH Paget disease of bone (PDB) and frontotemporal dementia (FTD) (hereafter referred to as IBMPFD; OMIM 167320) is a rare autosomal dominant multisystem disease caused by missense mutations in the valosin-containing protein (*VCP*) gene on chromosome 9p13.3-p12.[1] It is characterized by (1) adult-onset, slowly progressive, proximal predominant myopathy with initial involvement of the hip girdle and shoulder girdle muscles; (2) PDB presenting with abnormal bone homeostasis, with a typical distribution throughout spine, pelvis, scapulae, and skull, leading to bone pain or asymptomatic radiographic changes; and (3) FTD with early behavior or language changes.[2-4]

Inclusion body myopathy with PDB and FTD was first described in 2000, when it was recognized as a clinically and genetically unique syndrome.[1,5] To date, 29 families with IBMPFD have been reported worldwide, and none of these families were from Asia or of Asian descent.[6] Herein, we describe detailed clinical, electrophysiological, biochemical, and neuroimaging findings of 3 affected Korean family members who carried the p.R155C mutation in the *VCP* gene. To our knowledge, this report provides the first documented IBMPFD family in Asia.

METHODS

PATIENTS

Case P3

The index patient, a 51-year-old woman, had impairment of single-word comprehension at the age of 47 years and was evaluated at the dementia clinic at the age of 49 years. The results of a neurological examination were unremarkable. Administration of a subset of the Korean version of the Western Aphasia Battery[7] showed that her speech was fluent but incomprehensible. Excessive speech output, press of speech, severe comprehension deficits, semantic paraphasic errors, impaired repetition, and anomia were also noted from the bedside language evaluation. Despite progressive

©2011 American Medical Association. All rights reserved.
Downloaded From: http://jamanetwork.com/ on 05/24/2013

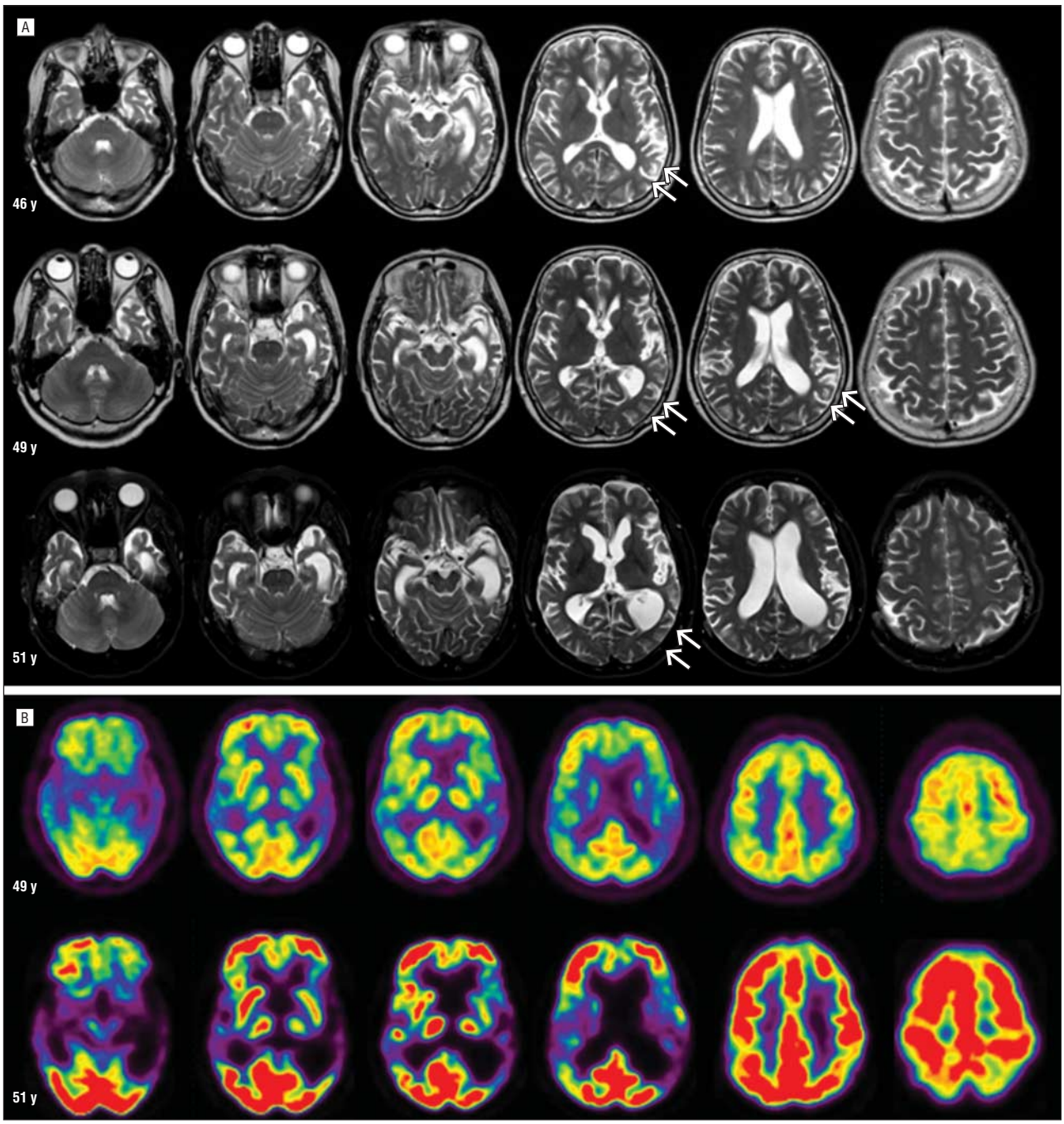

Figure 1. Serial brain magnetic resonance imagings (A) and [^{18}F]-fluorodeoxyglucose positron emission tomography images (B) in case P3 showed progressive bilateral anterior temporal atrophy and hypometabolism (worse in the left), left lateral temporal and inferior parietal atrophy (white arrows), detected even at the preclinical stage of age 46 years, and hypometabolism.

fluent aphasia, her daily activities were well preserved. Her husband reported that she had been mildly irritated and frustrated by her language problems.

Laboratory results of studies on complete blood cell count, electrolytes, chemistry, lipid profiles, liver function, thyroid function, presence of syphilis, vitamin B_{12}, folate, and homocysteine were within normal limits; however, the alkaline phosphatase (ALP) level was mildly elevated (169 U/L; normal range, 30-115 U/L) (to convert ALP to microkat per liter, multiply by 0.0167). Apolipoprotein E (*APOE*) genotype was ε3/ε3. Because of her comprehension deficits, only parts of the neuropsychological testing were performed. Her Korean Mini-Mental State Examination score was 5/30. She had scores of 26/36 on the Rey-Osterreith Complex Figure Test and 8/19 on the digit symbol substitution task. She scored only 1 out 15, with semantic naming errors (boots as shoes, escalator as stairs, and conical hat as hat), on the Korean version of the Boston Naming Test.[8]

Attempts to give appropriate explanations for the use of objects presented in the naming test (eg, she described "traffic lights" as "thing which is standing by the car") argued against a dense visual object agnosia. Brain magnetic resonance imaging (MRI) at the age of 51 years demonstrated severe bilateral anterior and lateral temporal atrophy and left inferior parietal atrophy with asymmetric dilatation of the left lateral ventricle (**Figure 1** A and **Figure 2**). These abnormalities represented significant changes from the time of previous MRI evaluations

©2011 American Medical Association. All rights reserved.
Downloaded From: http://jamanetwork.com/ on 05/24/2013

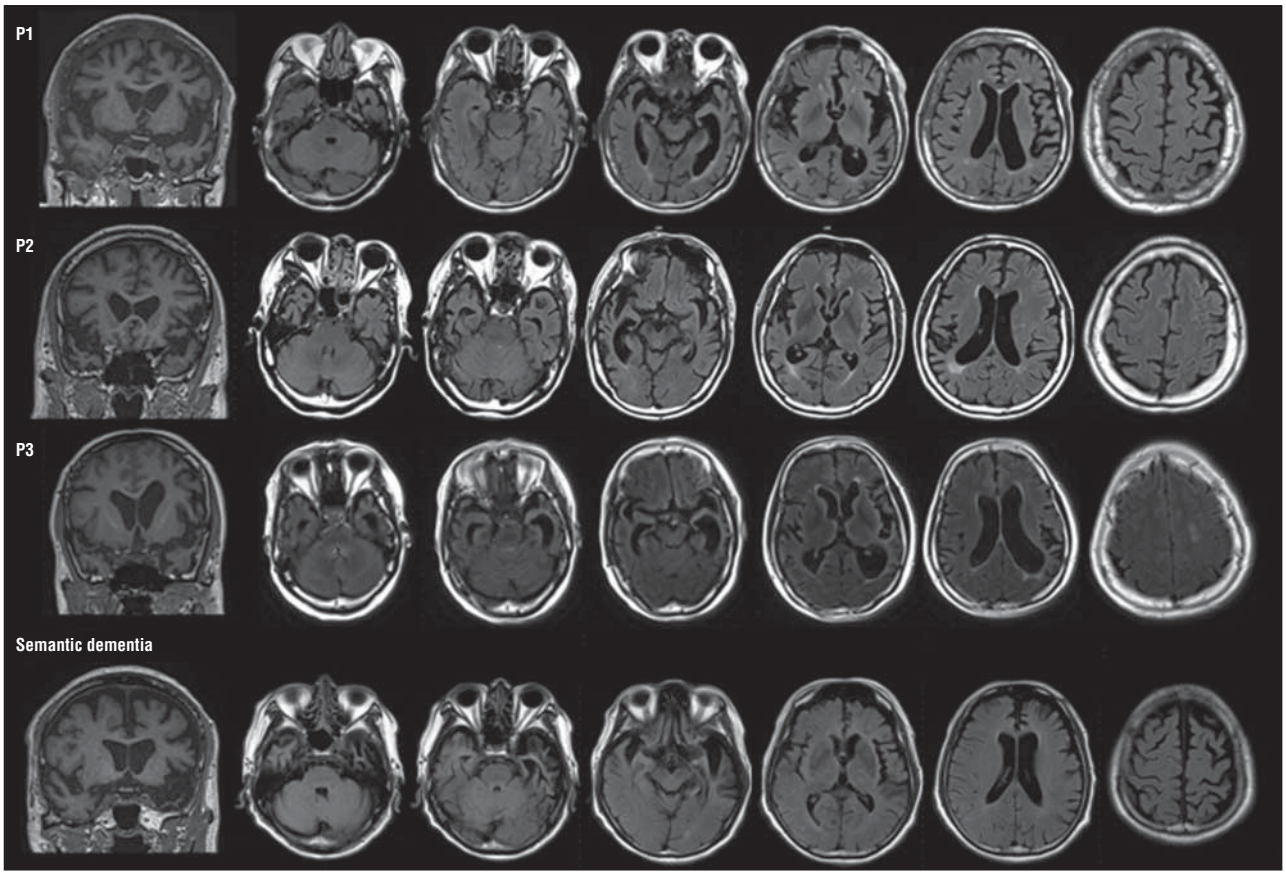

Figure 2. T1-weighted coronal images at the level just anterior to temporal stem and fluid-attenuated inversion recovery axial brain magnetic resonance imagings (MRIs) of 3 affected individuals with inclusion body myopathy with Paget disease of bone and frontotemporal dementia (IBMPFD) (cases P1, P2, and P3) and a 62-year-old man with typical sporadic semantic dementia. Brain MRIs of patients with IBMPFD showed asymmetric anterior and lateral temporal, frontal, and inferior parietal atrophy with ventricular enlargement (left-predominant atrophy in cases P1 and P3, and right-predominant atrophy in case P2) compared with the patient with sporadic semantic dementia who demonstrated severe left anterior temporal and frontal atrophy. The time intervals from dementia onset to brain MRIs were approximately 4 years in case P1, 3 years in case P2, 4 years in case P3, and 4 years in the patient with sporadic semantic dementia.

(Figure 1A) for a nonspecific headache (age 46 years) and comprehension deficits (age 49 years). Fluorine-18-fluorodeoxyglucose positron emission tomography (^{18}F-FDG-PET) revealed severe glucose hypometabolism in the bilateral frontotemporoparietal areas (worse on the left side), also reflecting a more severe abnormality when compared with initial ^{18}F-FDG-PET images obtained at age 49 years (Figure 1B). Based on the clinical history, neurological examination, and neuropsychological and serial neuroimaging findings, the patient was diagnosed with left-predominant semantic dementia.[9]

Case P2

A 57-year-old man, the third brother of case P3, was evaluated at the neuromuscular clinic at the age of 54 years for a 4-year history of slowly progressive, symmetric, proximal predominant muscle weakness in the bilateral upper and lower extremities. Muscle atrophy was detected in the bilateral shoulders and proximal legs. He showed a waddling gait and bilateral winged scapulae. Plasma creatine kinase levels were mildly elevated at 243 U/L (normal range, 5-217 U/L) (to convert creatine kinase to microkat per liter, multiply by 0.0167). The results of nerve conduction studies (ie, nerve conduction velocity) were normal. Electromyography showed dominant denervation changes with high amplitudes and long-duration motor unit potentials. Computed tomography scans of the upper- and lower-limb muscles revealed fatty replacement in the bilateral deltoids, right biceps, and bilateral gluteus and in the anterolateral musculature of the right midthigh and bilateral calf muscles (eFigure 1A, available at http://www.archneurol.com). Biopsy of the right biceps muscle showed nonspecific myopathic changes with only minimal variation in muscle fiber size and occasional necrotic fibers (eFigure 1B).

Taken together, these findings suggested a possible diagnosis of limb-girdle muscular dystrophy or facioscapulohumeral muscular dystrophy. At approximately the same time as the diagnosis with limb-girdle muscular dystrophy or facioscapulohumeral muscular dystrophy, the patient began to develop comprehension deficits. His language problems rapidly progressed over the following 2 years, and he came to our dementia clinic for evaluation at the age of 57 years. He had significant comprehension deficits with jargon speech. His wife noted that he had difficulty recognizing the faces of people he had known previously, and he was manifesting some behavioral changes, including apathy and impatience. Neuropsychological tests could not be performed because of his severely impaired comprehension. Neurological reexamination revealed more severe muscle weakness and atrophy in the bilateral limbs, a head drop, winged scapulae, lordosis, and a waddling gait. Results of routine laboratory studies for evaluation of dementia were within normal limits. *APOE* genotype was ε3/ε3. Brain MRI obtained approximately 3 years after the comprehension deficits arose showed bilateral temporal atrophy (more severe on the right) and asymmetric enlargement of the right lateral ventricle (Figure 2). ^{18}F-FDG-PET revealed glucose hypometabolism in the bilateral frontotemporoparietal lobes, which was much worse on the right (**Figure 3**A). Based on the clinical

©2011 American Medical Association. All rights reserved.
Downloaded From: http://jamanetwork.com/ on 05/24/2013

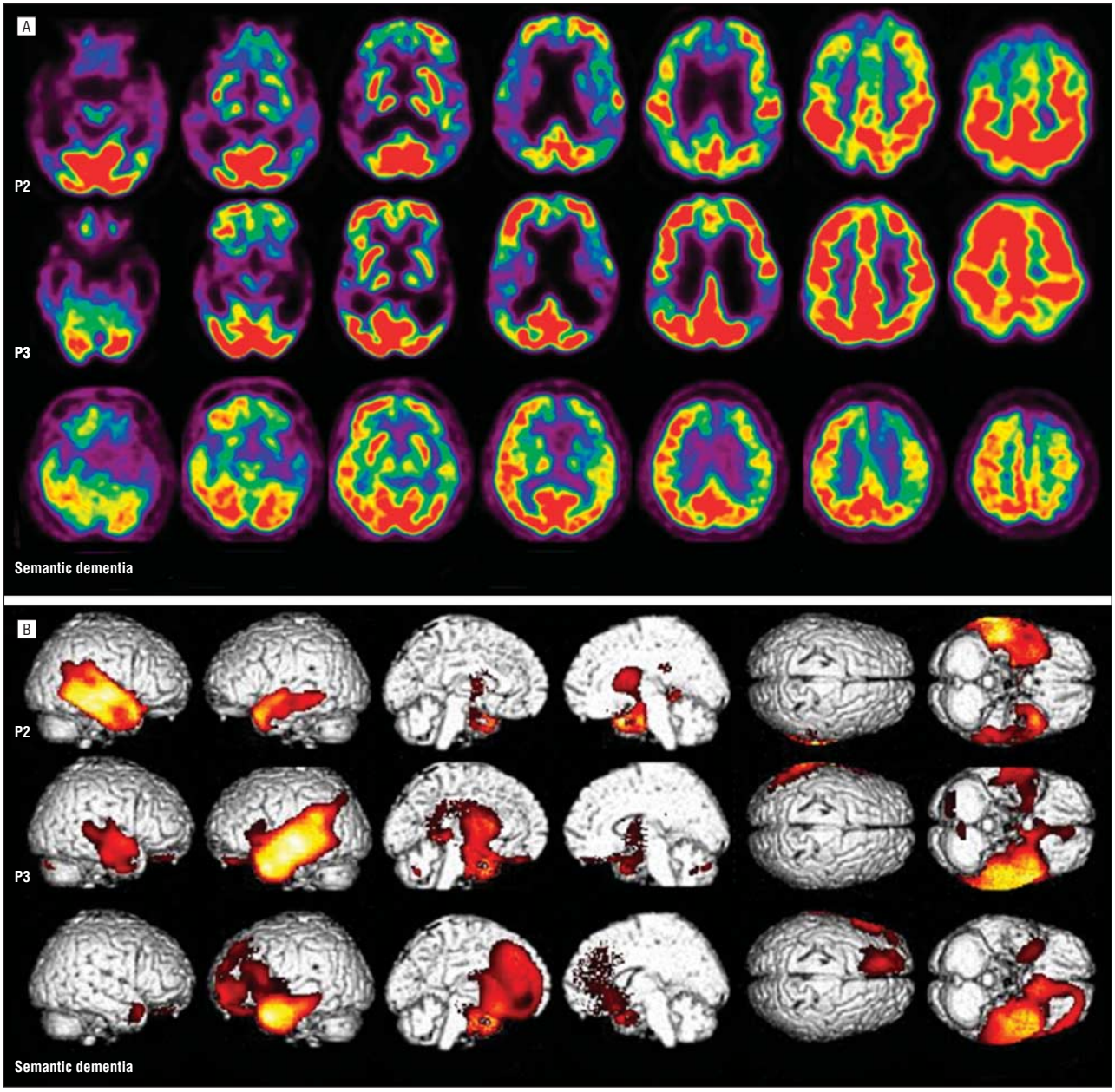

Figure 3. A, [^{18}F]-fluorodeoxyglucose positron emission tomography (^{18}F-FDG-PET) axial images of 2 affected individuals with inclusion body myopathy with Paget disease of bone and frontotemporal dementia (IBMPFD) (cases P2 and P3) and a 62-year-old man with typical sporadic semantic dementia showing glucose hypometabolism in the same regions atrophied on brain magnetic resonance imaging (Figure 2). The time intervals from dementia onset to ^{18}F-FDG-PET were roughly 3 years in case P2, 4 years in case P3, and 4 years in the patient with sporadic semantic dementia. B, Hypometabolic regions in patients with IBMPFD (cases P2 and P3) and in the same patient with semantic dementia were examined using statistical parametric mapping PET analysis and were compared with those in 29 cognitively normal controls (mean [SD] age, 61.4 [8.4] years), respectively. Patients with IBMPFD revealed hypometabolism mainly in the bilateral anterior and lateral temporal and inferior parietal areas, whereas the patient with semantic dementia showed hypometabolism mostly in the bilateral anterior temporal and frontal areas.

features of fluent aphasia and prosopagnosia, the family history of semantic dementia in his sister (case P3), and bilateral anterior temporal atrophy and hypometabolism on brain MRI and ^{18}F-FDG-PET, which were similar though contralateral to those of case P3, we offered a provisional clinical diagnosis of right-predominant semantic dementia with some atypical features. Repeated electromyography showed dominant neuropathic changes mixed with subtle myopathic features, replicating the initial findings. A second biopsy of the left biceps muscle revealed the grouping of atrophic fibers with scattered angulated and necrotic fibers. Rimmed vacuoles were also observed in the cytoplasm (eFigure 1C).

Case P1

A 65-year-old man, the second brother of case P3, was evaluated in our clinic for slowly progressive muscle weakness and cognitive deficits. His muscle weakness began at age 47 years, but he was first evaluated in the neuromuscular clinic at age 60 years. Electromyography showed evidence of active and chronic neuropathic patterns. Muscle biopsy disclosed nonspecific myopathic features, and he was diagnosed with nonspecific myopathy. During the course of the disease, he complained of back pain and was evaluated at the orthopedic clinic at age 53 years. His plasma ALP level was elevated (895 U/L; normal range, 95-280 U/L), and a ^{99m}Tc bone scan

©2011 American Medical Association. All rights reserved.
Downloaded From: http://jamanetwork.com/ on 05/24/2013

revealed increased uptake in the skull, right humerus, and left pelvis, compatible with PDB. Multiple cognitive impairments, including memory and comprehension deficits, developed at age 61 years. He had fluent speech but was incomprehensible. Muscle weakness continued to progress, and he became bedridden at age 63 years. During a neurological reexamination in our clinic, he showed quadriparesis and generalized muscle atrophy in the bilateral upper and lower extremities. Deep tendon reflexes were symmetrically decreased in the upper extremities and absent in the lower extremities. Results of routine laboratory studies for evaluation of dementia were within normal limits, except for a markedly elevated ALP level (1937 U/L; normal range, 96-254 U/L). *APOE* genotype was ε3/ε3. Nerve conduction velocity was normal. Repeated electromyography revealed dominant neuropathic changes mixed with subtle myopathic features. A limited neuropsychological battery of tests was conducted owing to the patient's comprehension deficits. The Korean Mini-Mental State Examination score was 7/25, the clinical dementia rating was 2, and the general deteriorating scale was 6. No remarkable personality changes were noted. A brain MRI performed approximately 4 years after the cognitive impairment arose showed diffuse cortical atrophy, especially in the bilateral frontotemporal lobes, although it was worse on the left. The left lateral ventricle was dilated (Figure 2). Based on the clinical features of fluent speech with severe comprehension deficits, family history of semantic dementia in his sister (case P3), and bilateral frontotemporal atrophy with dilated left lateral ventricle on brain MRI (a similar pattern to that of case P3), we made a clinical diagnosis of left-predominant semantic dementia, noting the atypical features and advanced stage of disease.

Parents

The mother of these patients had died in her 70s from renal failure. She did not have a history of muscle weakness, bone pain, or dementia. Their father had died in his 50s; however, no clinical reports were available for him. One family member noted that the father had had right-hand weakness. Autosomal dominant inheritance of myopathy, a dementia syndrome resembling semantic dementia, and PDB was thought consistent with IBMPFD.

MUTATION ANALYSIS

Subjects or their surrogate decision makers provided informed consent to undergo genetic analysis, which was approved by the institutional review boards. For the mutational analysis, genomic DNA was extracted from the patients' peripheral leukocytes. Because most of the mutations have been identified in exons 2, 3, 5, and 6 of the *VCP* gene,[10] these exons were first amplified through polymerase chain reactions and then directly sequenced. The primers used in our study were designed as follows: 2+3F: GGTCTAGGG ACAGCTTCATC; 2+3R: TGTAATACATGGGTCCTGCC; 5F: CTTGGCATTTTGACCCCAGG; 5R: CCCAGTCC TGACAGTTACCA; 6F: ACCATGCCGGGTTGAGAATC; and 6R: TTGCCCCTCTAATCCAAGGC.

RESULTS

The *VCP* mutation analysis revealed that cases P1, P2 and P3 were heterozygous for a previously reported mutation of c.463C>T (p.R155C) (**Figure 4**A).[10] This missense mutation is in the N-terminal CDC58 domain of the protein.

After confirmation of the *VCP* mutation, we evaluated cases P3 and P2 for PDB and case P3 for myopathy. In case P3, the serum ALP level (547 U/L; normal range, 95-280 U/L) and the urine deoxypyridinoline (DPD) level (18.9nM DPD/mM creatinine; normal range, 2.3nM DPD/mM creatinine-5.4nM DPD/mM creatinine) were elevated. A ^{99m}Tc bone scan showed active bone lesions within the right shoulder and pelvic bone (eFigure 2). In case P2, the serum ALP level (295 U/L; normal levels, 95-280 U/L) and the urine DPD level (27.8nM DPD/mM creatinine; normal range, 2.3nM DPD/mM creatinine-5.4nM DPD/mM creatinine) were also elevated; however, the ^{99m}Tc bone scan showed no active bone lesions. There were no definite myopathic or neuropathic changes in electromyography, nerve conduction velocity, or muscle biopsy in case P3.

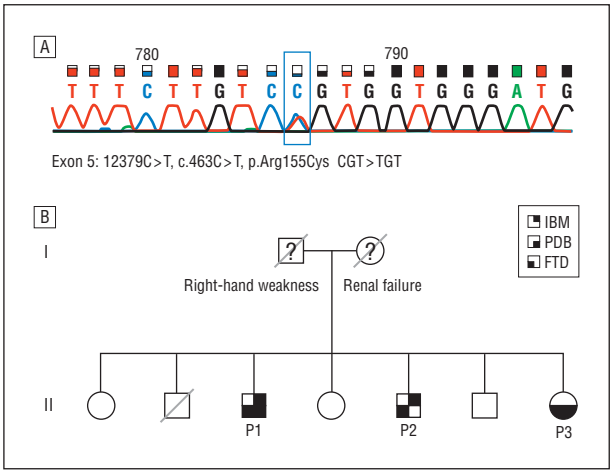

Figure 4. A, Chromatogram of the R155C mutation in exon 5 of the *VCP* gene. B, Family pedigree (cases P1, P2, and P3). FTD indicates frontotemporal dementia; IBM, inclusion body myopathy; PDB, Paget disease of bone.

A voxel-based analysis using statistical parametric mapping was performed for cases P2 and P3 and for a 62-year-old man with a 4-year history of sporadic semantic dementia, compared with 29 cognitively normal controls (9 men and 20 women with a mean [SD] age of 61.4 [8.4] years). The patients with IBMPFD had significant glucose hypometabolism predominantly in the inferolateral temporal and inferior parietal areas, whereas a comparison subject with sporadic semantic dementia showed hypometabolism mainly in the anterior temporal and frontal areas ($P<.001$, uncorrected) (Figure 3B). All 3 patients are alive at the time of this writing; therefore, no neuropathological data are available.

COMMENT

To date, 19 missense mutations in the *VCP* gene have been reported.[11] The most common mutational hot spot is arginine 155 in exon 5, and an arginine-to-cysteine shift at codon 155 (R155C) is known to be the most frequent mutation.[2] The R155C mutation was originally described in 2 North American families and was subsequently identified in several unrelated European families.[10,12-16] Thus, to our knowledge, this is the first IBMPFD family in Asia carrying the R155C mutation or any mutation in the *VCP* gene.

Inclusion body myopathy with PDB and FTD is characterized by the variable combination of myopathy, PDB,

©2011 American Medical Association. All rights reserved.
Downloaded From: http://jamanetwork.com/ on 05/24/2013

Table 1. Comparisons of the Clinical Features of Cases of Inclusion Body Myopathy With Paget Disease of Bone and Frontotemporal Dementia Linked to *VCP* p.R155C

Study and/or Case No.	Age of Onset, y	Sex	First Symptom	Phenotype of *VCP* p.R155C			Age of Onset, y		
				IBM	PDB	FTD	IBM	PDB	FTD
Schröder et al[12] (2005, German)									
	46	F	IBM	+	–	+	46	Absent	47
Guyant-Maréchal et al[13] (2006, French)									
II-5	58	F	FTD	–	–	+	Absent	Absent	58
II-6	57	F	IBM	+	+[a]	+	57	NA	64
II-7	49	F	IBM	+	–	+	49	Absent	54
II-8	45	F	IBM	+	+[a]	+	45	NA	57
III-9	40	F	IBM	+	–	+	40	Absent	47
III-31	35	F	IBM	+	–	–	35	Absent	Absent
III-36	35	F	IBM	+	+[a]	+	35	NA	39
III-37	32	F	IBM	+	–	–	32	Absent	Absent
IV-1	24	M	IBM	+[a]	–	–	NA	Absent	Absent
Gidaro et al[14] (2007, Italian)									
II-1	45	M	IBM	+	–	+	45	Absent	52
III-1	38	F	IBM	+	+[a]	–	38	NA	Absent
Kimonis et al[15] (2008, German)									
II-4	30	F	IBM	+	+	+	30	32	46
III-4	32	M	IBM/PDB	+	+	+	32	32	57
III-6	34	M	IBM	+	+	+	34	NA	NA
III-9	NA	F	NA	+	+	+	NA	NA	56
III-11	32	M	IBM/PDB	+	+	–	32	32	Absent
IV-3	34	F	IBM	+	–	–	34	Absent	Absent
IV-4	31	M	IBM	+	+	–	31	33	Absent
IV-5	40	M	PDB	–	+	–	Absent	40	Absent
IV-15	23	M	PDB	+	+	–	24	23	Absent
Stojkovic et al[16] (2009, French and Spanish)									
1	32	F	IBM	+	NA	–	32	NA	Absent
2	20	M	PDB	+	+	–	NA	20	Absent
14	40	F	IBM	+	+[a]	–	40	NA	Absent
15	25	F	IBM	+	+[a]	–	25	NA	Absent
16	24	F	IBM	+	NA	–	24	NA	Absent
19	38	M	IBM	+	NA	–	38	NA	Absent
Our Korean study									
P1	47	M	IBM	+	+	+	47	53	61
P2	50	M	IBM	+	–	+	50	Absent	54
P3	47	F	FTD	–	+[a]	+	Absent	NA	47

Abbreviations: FTD, frontotemporal dementia; IBM, inclusion body myopathy; NA, not applicable; PDB, Paget disease of bone.
[a] Asymptomatic.

and FTD. It has been reported that the prevalence rates of myopathy, PDB, and FTD are about 90%, 51%, and 32% among patients with IBMPFD, respectively.[3,4,10] Kimonis et al[3] further reported that 30% of IBMPFD cases present with isolated myopathy, whereas only 3% have isolated FTD and 5% have isolated PDB. In contrast, all of our cases had FTD, and one of them (case P3) first presented with FTD. Thus, the higher prevalence of myopathy compared with FTD and PDB in IBMPFD might be due to the fact that many patients with IBMPFD are first seen at a neuromuscular clinic owing to the initial presentation with myopathy, resulting in underdiagnosis of PDB and FTD.

In our report, the clinical and laboratory features of myopathy (in cases P1 and P2) and PDB (in cases P1 and P3) that manifested are highly consistent with those described previously in IBMPFD (Figure 4B).[3] The present series, however, broadens the phenotypic spectrum of *VCP* mutation–associated FTD. Among many previous reports of IBMPFD, limited neuropsychological and neuroimaging data have been described. The index patient (case P3) in our Korean family first presented to a dementia clinic owing to isolated language deficits. The other 2 patients (cases P1 and P2) initially presented with myopathy and later developed dementia, resulting in evaluation at a dementia specialty clinic. As a result, brain MRIs for all 3 patients and ^{18}F-FDG-PET for 2 patients (cases P2 and P3) were available. Whereas most reported brain MRI or computed tomography scans in R155C cases have shown diffuse cortical atrophy (**Tables 1** and **2**), the brain MRIs of our patients revealed prominent, asymmetric, focal atrophy in the anterior inferior and lateral temporal lobes and the inferior parietal lobule with asymmetric ventricular enlargement (left in cases P1 and P3 and right in case P2). Although our patients were clinically diagnosed with left- or right-predominant semantic dementia, brain MRIs showed less severe anterior temporal atrophy and more extensive posterolateral temporal and parietal atrophy, with relative frontal sparing, compared with a patient with typical sporadic semantic dementia with a similar disease duration (Figure 2 and eFigure 3).[17] Besides, this posterolateral temporal and parietal atrophy was detected even in the brain MRIs taken at the preclinical stage (age, 46 years) of case P3 (Figure 1A). Similarly, ^{18}F-FDG-PET scanning of our patients with IBMPFD (cases P2 and P3) revealed a pattern of hypometabolism more focused on lateral temporal and inferior parietal regions, contrasting with the typical anterior temporal and orbitomedial frontal hypometabolism seen in typical semantic dementia

©2011 American Medical Association. All rights reserved.
Downloaded From: http://jamanetwork.com/ on 05/24/2013

Table 2. Comparisons of the Studies of Cases of Inclusion Body Myopathy With Paget Disease of Bone and Frontotemporal Dementia Linked to *VCP* p.R155C

		Phenotype of *VCP* p.R155C			Results of Myopathy Studies			Results of PDB Studies		Results of Dementia Studies		
Study and/or Case No.	Sex/ Age of Onset, y	IBM	PDB	FTD	CK Level	EMG	Muscle Biopsy	ALP Level	Radiography, Bone Scan, and/or Histologic Analysis	Clinical Features	Brain MRI and/or CT	^{18}F-FDG-PET and/or SPECT
Schröder et al[12] (2005, German)												
	F/46	+	–	+	NA	NA	IBM	NA	NA	Deficits in language comprehension and object naming, and marked psychomotor slowing	Marked frontal and temporal atrophy	NA
Guyant-Maréchal et al[13] (2006, French)												
II-5	F/58	–	–	+	Normal to twice the normal upper limit	NA	Mixed type (angulated fiber, rimmed vacuole, and fiber-type grouping)	NA	NA	Frontal behavioral symptoms	Mild to severe cortical atrophy with prominent enlargement of sylvian fissure	NP
II-6	F/57	+	+[a]	+	Normal to twice the normal upper limit	Myopathic pattern and myotonia	Mixed type (angulated fiber, rimmed vacuole, and fiber-type grouping)	NA	Distorted bone architecture and irregular trabeculae	Early onset dementia	Mild to severe cortical atrophy with prominent enlargement of sylvian fissure	Frontal hypoperfusion
II-7	F/49	+	–	+	Normal to twice the normal upper limit	Myopathic pattern	Mixed type (angulated fiber, rimmed vacuole, and fiber-type grouping)	NA	NA	Frontal behavioral symptoms	Mild to severe cortical atrophy with prominent enlargement of sylvian fissure	NP
II-8	F/45	+	+[a]	+	Normal to twice the normal upper limit	Myotonia	Mixed type (angulated fiber, rimmed vacuole, and fiber-type grouping)	NA	Distorted bone architecture and irregular trabeculae	Memory deficit, constructional impairment, and reduced speech	Mild to severe cortical atrophy with prominent enlargement of sylvian fissure	NP
III-9	F/40	+	–	+	Normal to twice the normal upper limit	Myopathic pattern and myotonia	NP	NA	NA	Schizophrenic-like psychosis	Cerebral atrophy was absent	Frontal hypoperfusion
III-31	F/35	+	–	–	Normal to twice the normal upper limit	Myotonia	NP	NA	NA	NA	Cerebral atrophy was absent	Frontal hypoperfusion
III-36	F/35	+	+[a]	+	Normal to twice the normal upper limit	Myopathic pattern	Normal	NA	Pagetic bone structure of tibia and pelvis	Memory deficit, constructional impairment, severe loss of speech and comprehension deficits, frontal behavioral symptoms, and mental retardation	Cerebral atrophy was absent	Frontal hypoperfusion

(continued)

©2011 American Medical Association. All rights reserved.
Downloaded From: http://jamanetwork.com/ on 05/24/2013

Table 2. Comparisons of the Studies of Cases of Inclusion Body Myopathy With Paget Disease of Bone and Frontotemporal Dementia Linked to *VCP* p.R155C (continued)

Study and/or Case No.	Sex/ Age of Onset, y	Phenotype of *VCP* p.R155C			Results of Myopathy Studies			Results of PDB Studies		Results of Dementia Studies		
		IBM	PDB	FTD	CK Level	EMG	Muscle Biopsy	ALP Level	Radiography, Bone Scan, and/or Histologic Analysis	Clinical Features	Brain MRI and/or CT	^{18}F-FDG-PET and/or SPECT
Guyant-Maréchal et al[13] (2006, French) (continued)												
III-37	F/32	+	–	–	Normal to twice the normal upper limit	Myopathic pattern and myotonia	Nonspecific myopathy (angulated fiber and rimmed vacuole)	NA	NA	Mental retardation	Cerebral atrophy was absent	Frontal hypoperfusion
IV-1	M/24	+[a]	–	–	Normal to twice the normal upper limit	Myopathic pattern and myotonia	NP	NA	NA	NA	NP	NP
Gidaro et al[14] (2007, Italian)												
II-1	M/45	+	–	+	Normal	NA	Mixed type (angulated atrophic fiber and rimmed vacuole)	Normal	NA	Personality and behavioral change and impairment of cognitive functions involving verbal and memory skills	Diffuse cortical and subcortical atrophy	NA
III-1	F/38	+	+[a]	–	Normal	Mixed pattern (myopathic pattern with large MUPs)	Occasional angulated atrophic fibers and rare small rimmed vacuoles	Increased	Increased ^{99m}Tc uptake in the spine, clavicle, and skull	Mild attention deficit without other signs of cognitive impairment	Normal brain MRI	NA
Kimonis et al[15] (2008, German)												
II-4	F/30	+	+	+	NA	NA	NA	NA	NA	NA	NA	NA
III-4	M/32	+	+	+	NA	NA	NA	NA	NA	NA	NA	NA
III-6	M/34	+	+	+	NA	NA	NA	NA	NA	NA	NA	NA
III-9	NA	+	+	+	NA	NA	NA	NA	NA	NA	NA	NA
III-11	M/32	+	+	–	NA	NA	NA	NA	NA	NA	NA	NA
IV-3	F/34	+	–	–	Elevated	Myopathic pattern	IBM with rimmed vacuoles	Normal	Normal bone scan	NA	NA	NA
IV-4	M/31	+	+	–	Elevated	Myopathic pattern	IBM	Normal	Typical PDB changes on radiograph	NA	NA	NA
IV-5	M/40	–	+	–	Elevated	NP	NP	Elevated	Typical PDB changes on radiograph and bone scan	NA	NA	NA
IV-15	M/23	+	+	–	Elevated	Myopathic pattern	IBM	Normal	Typical PDB changes on radiograph and bone scan	NA	NA	NA
Stojkovic et al[16] (2009, French and Spanish)												
1	F/32	+	NA	–	Normal or elevated	NA	NA	NA	NA	Absent	Normal	Normal perfusion
2	M/20	+	+	–	Normal or elevated	NA	NA	Elevated	Increased cortical thickening and sclerosis in hip and vertebra	Absent	NA	Normal perfusion

(continued)

©2011 American Medical Association. All rights reserved.
Downloaded From: http://jamanetwork.com/ on 05/24/2013

Table 2. Comparisons of the Studies of Cases of Inclusion Body Myopathy With Paget Disease of Bone and Frontotemporal Dementia Linked to *VCP* p.R155C (continued)

Study and/or Case No.	Sex/ Age of Onset, y	Phenotype of *VCP* p.R155C			Results of Myopathy Studies			Results of PDB Studies		Results of Dementia Studies		
		IBM	PDB	FTD	CK Level	EMG	Muscle Biopsy	ALP Level	Radiography, Bone Scan, and/or Histologic Analysis	Clinical Features	Brain MRI and/or CT	^{18}F-FDG-PET and/or SPECT
Stojkovic et al[16] (2009, French and Spanish) (continued)												
14	F/40	+	+[a]	–	Normal or elevated	NA	NA	Normal	Normal radiograph finding and typical PDB changes on bone scan	Absent	Normal	Normal perfusion
15	F/25	+	+[a]	–	Normal or elevated	NA	NA	Normal	Normal radiograph finding and typical PDB changes on bone scan	Absent	NA	Normal perfusion
16	F/24	+	NA	–	Normal or elevated	NA	NA	NA	NA	Absent	NA	Frontal hypoperfusion
19	M/38	+	NA	–	Normal or elevated	NA	NA	NA	NA	Absent	NA	Normal perfusion
Our Korean study												
P1	M/47	+	+	+	NA	Active and chronic neurogenic pattern with myopathic pattern	Nonspecific myopathy	Elevated	Increased ^{99m}Tc uptake in skull, humerus, and pelvis	Memory deficits and repetitive speech, deficits in language comprehension	Marked temporal and inferior parietal atrophy (left predominance) rather than frontal atrophy	NP
P2	M/50	+	–	+	Slightly elevated	Mixed pattern (myopathic pattern with large MUPs)	Mixed type (angulated fiber, rimmed vacuole, and fiber-type grouping)	Elevated	Normal bone scan	Deficits in language comprehension, prosopagnosia, and subtle behavioral changes	Marked temporal and inferior parietal atrophy (right predominance) rather than frontal atrophy	Marked temporal and inferior parietal hypometabolism (right predominance) rather than frontal hypometabolism
P3	F/47	–	+[a]	+	Normal	Normal	Normal	Elevated	Increased ^{99m}Tc uptake in shoulder and pelvis	Deficits in language comprehension	Marked temporal and inferior parietal atrophy (left predominance) rather than frontal atrophy	Marked temporal and inferior parietal hypometabolism (left predominance) rather than frontal hypometabolism

Abbreviations: ALP, alkaline phosphatase; CK, creatine kinase; CT, computed tomography; EMG, electromyography; FTD, frontotemporal dementia; IBM, inclusion body myopathy;
MRI, magnetic resonance imaging; MUP, motor unit potential; NA, not applicable; NP, not performed; PDB, Paget disease of bone; SPECT, single-photon emission computed tomography; ^{18}F-FDG-PEG, [^{18}F]-fluorodeoxyglucose-positron emission tomography.
[a] Asymptomatic.

(Figure 3B).[18] It remains unknown whether these MRI and ^{18}F-FDG-PET findings in our patients with IBMPFD who were clinically diagnosed with semantic dementia are typical neuroimaging features of patients with IBMPFD because there have been no previous reports of these specific and serial neuroimaging findings of patients with IBMPFD, and we cannot, in general, estimate how frequently these features might be observed in patient with the *VCP* mutation. Additional studies with structural or functional imaging analysis are needed to define the regional degeneration pattern associated with IBMPFD.

A recent neuropathological study of IBMPFD reported frontotemporal lobar degeneration with ubiquitin-positive/TDP-43–positive inclusions.[19] Out of the 8 patients with IBMPFD examined by the authors, the one with the R155C mutation and a history of FTD was included. The neuropathological features of that case were described as high-density neuronal intranuclear ubiquitin pathology in the superior/middle temporal gyrus, moderate-density neuronal intranuclear ubiquitin pathology in the inferior parietal lobule, low-density neuronal intranuclear ubiquitin pathology in the putamen, and rare neuronal intranuclear

©2011 American Medical Association. All rights reserved.
Downloaded From: http://jamanetwork.com/ on 05/24/2013

ubiquitin pathology in the caudate, correlating well with the MRI features seen in the present series.

Mehta et al[20] suggested that the *APOE* 4 genotype is a potential genetic modifier that could be a risk factor for the development of FTD in IBMPFD. All patients with IBMPFD in our series, however, developed FTD early or later in their course despite an ε3/ε3 *APOE* genotype. Thus, additional analyses in larger samples are needed to explore possible associations between the presentation of FTD in IBMPFD and the *APOE* 4 genotype.

Phenotypic variability associated with *VCP* mutations has been reported, even within the same family with the same mutation, and no definitive genotype-phenotype correlations have been established.[21] Interestingly, one possible genotype-phenotype correlation for R155C can be suggested: female patients with R155C (2/30), including our index patient (case P3) who presented with FTD, were not accompanied by myopathy, whereas most patients (90%) with an R155C mutation (27/30) presented with myopathy (Tables 1 and 2). Further comprehensive studies of patients with *VCP* mutations are needed to further define the spectrum of genotype-phenotype relationships.

Accepted for Publication: December 7, 2010.
Published Online: February 14, 2011. doi:10.1001/archneurol.2010.376
Author Affiliations: Departments of Neurology (Drs E.-J. Kim, Park, and Ahn and Ms H.-S. Kim), Nuclear Medicine (Dr S.-J. Kim), and Radiology (Dr H.-J. Kim), Pusan National University Hospital, Pusan National University School of Medicine and Medical Research Institute, Busan, Department of Neurology, Pusan National University Yangsan Hospital, Pusan National University School of Medicine and Medical Research Institute, Yangsan (Dr D.-S. Kim), Department of Neurology, Clinical Neuroscience Center, Seoul National University Bundang Hospital, Seongnam (Drs Chang and S. Y. Kim), and Department of Neurology, School of Medicine, Brain Science and Engineering Institute, Kyungpook National University, Daegu (Dr Lee), Korea; and Memory and Aging Center, Department of Neurology, University of California, San Francisco (Dr Seeley).
Correspondence: SangYun Kim, MD, Department of Neurology, Clinical Neuroscience Center, Seoul National University Bundang Hospital, 300 Gumi-dong, Bundang-gu, Seongnam 463-707, Korea (neuroksy@snu.ac.kr).
Author Contributions: *Study concept and design:* E.-J. Kim and S. Y. Kim. *Acquisition of data:* E.-J. Kim, Park, D.-S. Kim, Ahn, H.-S. Kim, Chang, S.-J. Kim, H.-J. Kim, Lee, and S. Y. Kim. *Analysis and interpretation of data:* E.-J. Kim, Park, Seeley, and S. Y. Kim. *Drafting of the manuscript:* E.-J. Kim, Park, H.-S. Kim, and S. Y. Kim. *Critical revision of the manuscript for important intellectual content:* E.-J. Kim, D.-S. Kim, Ahn, Chang, S.-J. Kim, H.-J. Kim, Lee, Seeley, and S. Y. Kim. *Administrative, technical, and material support:* E.-J. Kim. *Study supervision:* E.-J. Kim, Seeley, and S. Y. Kim.
Financial Disclosure: None reported.
Funding/Support: This study was supported by grant A050079 from the Korea Health 21 R&D Project, Ministry of Health, Welfare, and Family Affairs, Republic of Korea.
Online-Only Material: The eFigures are available at http://www.archneurol.com.

REFERENCES

1. Kovach MJ, Waggoner B, Leal SM, et al. Clinical delineation and localization to chromosome 9p13.3-p12 of a unique dominant disorder in four families: hereditary inclusion body myopathy, Paget disease of bone, and frontotemporal dementia. *Mol Genet Metab*. 2001;74(4):458-475.
2. Guinto JB, Ritson GP, Taylor JP, Forman MS. Valosin-containing protein and the pathogenesis of frontotemporal dementia associated with inclusion body myopathy. *Acta Neuropathol*. 2007;114(1):55-61.
3. Kimonis VE, Fulchiero E, Vesa J, Watts G. VCP disease associated with myopathy, Paget disease of bone and frontotemporal dementia: review of a unique disorder. *Biochim Biophys Acta*. 2008;1782(12):744-748.
4. Weihl CC, Pestronk A, Kimonis VE. Valosin-containing protein disease: inclusion body myopathy with Paget's disease of the bone and fronto-temporal dementia. *Neuromuscul Disord*. 2009;19(5):308-315.
5. Kimonis VE, Kovach MJ, Waggoner B, et al. Clinical and molecular studies in a unique family with autosomal dominant limb-girdle muscular dystrophy and Paget disease of bone. *Genet Med*. 2000;2(4):232-241.
6. van der Zee J, Pirici D, Van Langenhove T, et al. Clinical heterogeneity in 3 unrelated families linked to *VCP* p.Arg159His. *Neurology*. 2009;73(8):626-632.
7. Kim H, Na DL. Normative data on the Korean version of the Western Aphasia Battery. *J Clin Exp Neuropsychol*. 2004;26(8):1011-1020.
8. Kim H, Na DL. Normative data on the Korean version of the Boston Naming Test. *J Clin Exp Neuropsychol*. 1999;21(1):127-133.
9. Neary D, Snowden JS, Gustafson L, et al. Frontotemporal lobar degeneration: a consensus on clinical diagnostic criteria. *Neurology*. 1998;51(6):1546-1554.
10. Watts GD, Wymer J, Kovach MJ, et al. Inclusion body myopathy associated with Paget disease of bone and frontotemporal dementia is caused by mutant valosin-containing protein. *Nat Genet*. 2004;36(4):377-381.
11. Ju JS, Weihl CC. Inclusion body myopathy, Paget's disease of the bone and frontotemporal dementia: a disorder of autophagy. *Hum Mol Genet*. 2010;19(R1):R38-R45.
12. Schröder R, Watts GD, Mehta SG, et al. Mutant valosin-containing protein causes a novel type of frontotemporal dementia. *Ann Neurol*. 2005;57(3):457-461.
13. Guyant-Maréchal L, Laquerrière A, Duyckaerts C, et al. Valosin-containing protein gene mutations: clinical and neuropathologic features. *Neurology*. 2006;67(4):644-651.
14. Gidaro T, Modoni A, Sabatelli M, Tasca G, Broccolini A, Mirabella M. An Italian family with inclusion-body myopathy and frontotemporal dementia due to mutation in the *VCP* gene. *Muscle Nerve*. 2008;37(1):111-114.
15. Kimonis VE, Mehta SG, Fulchiero EC, et al. Clinical studies in familial VCP myopathy associated with Paget disease of bone and frontotemporal dementia. *Am J Med Genet A*. 2008;146A(6):745-757.
16. Stojkovic T, el Hammouda H, Richard P, et al. Clinical outcome in 19 French and Spanish patients with valosin-containing protein myopathy associated with Paget's disease of bone and frontotemporal dementia. *Neuromuscul Disord*. 2009;19(5):316-323.
17. Rosen HJ, Gorno-Tempini ML, Goldman WP, et al. Patterns of brain atrophy in frontotemporal dementia and semantic dementia. *Neurology*. 2002;58(2):198-208.
18. Diehl-Schmid J, Grimmer T, Drzezga A, et al. Longitudinal changes of cerebral glucose metabolism in semantic dementia. *Dement Geriatr Cogn Disord*. 2006;22(4):346-351.
19. Forman MS, Mackenzie IR, Cairns NJ, et al. Novel ubiquitin neuropathology in frontotemporal dementia with valosin-containing protein gene mutations. *J Neuropathol Exp Neurol*. 2006;65(6):571-581.
20. Mehta SG, Watts GD, Adamson JL, et al. APOE is a potential modifier gene in an autosomal dominant form of frontotemporal dementia (IBMPFD). *Genet Med*. 2007;9(1):9-13.
21. Viassolo V, Previtali SC, Schiatti E, et al. Inclusion body myopathy, Paget's disease of the bone and frontotemporal dementia: recurrence of the *VCP* R155H mutation in an Italian family and implications for genetic counselling. *Clin Genet*. 2008;74(1):54-60.

©2011 American Medical Association. All rights reserved.
Downloaded From: http://jamanetwork.com/ on 05/24/2013